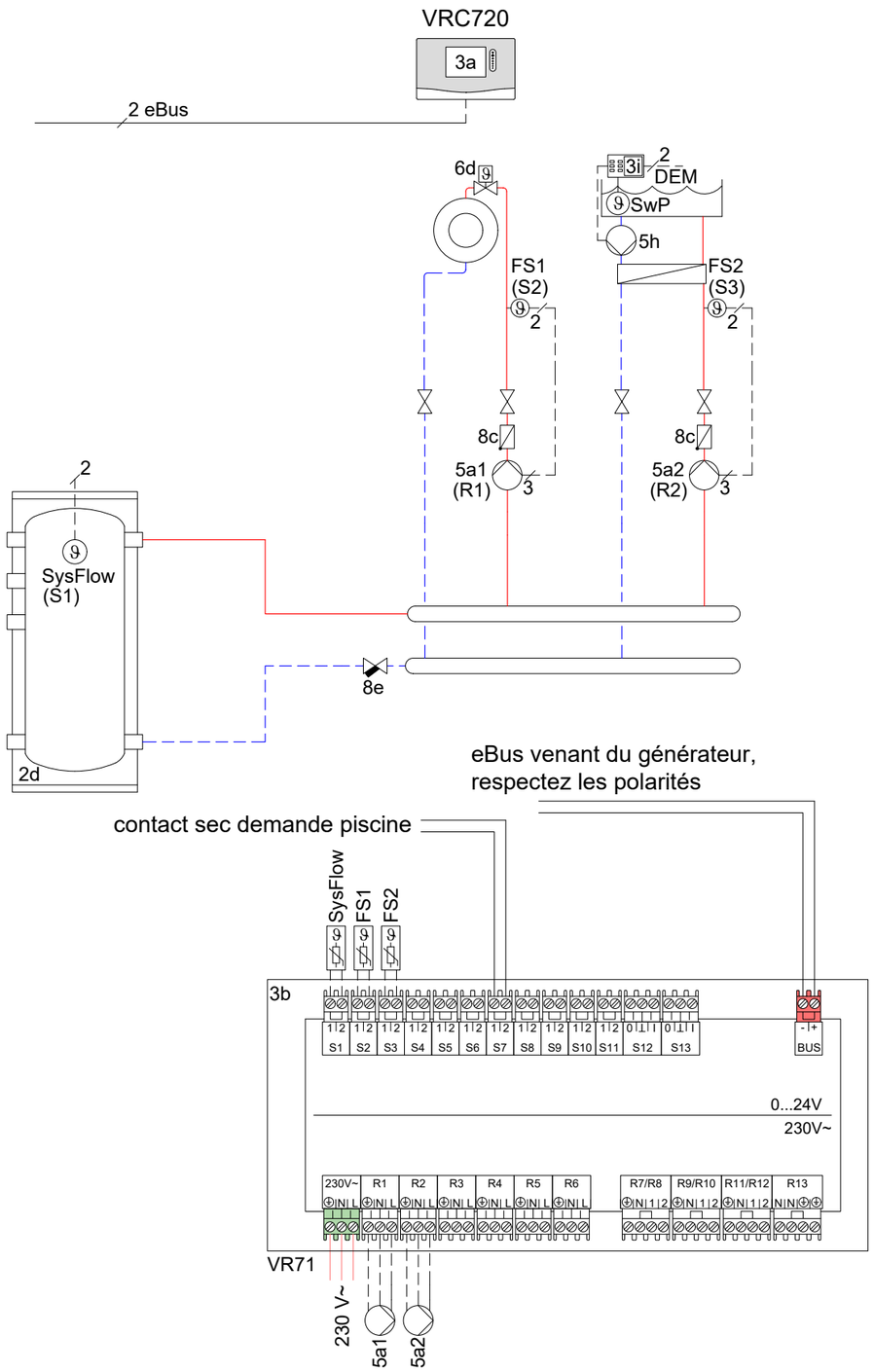

Attention, this principal scheme does not supersede a correct professional design of the system!
This scheme does not include all necessary shut-off and safety devices for a right installation. The applicable national and international laws, regulations, standards and directives must be adhered to! Due to special object-related circumstances or potential differences in the installation environment (e.g. climatic conditions) it is recommended to involve a specialized planning agency.

drawn: SDA	date:	10.04.2024	Appliances:
version no. 01.00	reference to		Controls: VRC720, VR71

Circuits: 1 x circuit radiateur direct,
1 x piscine